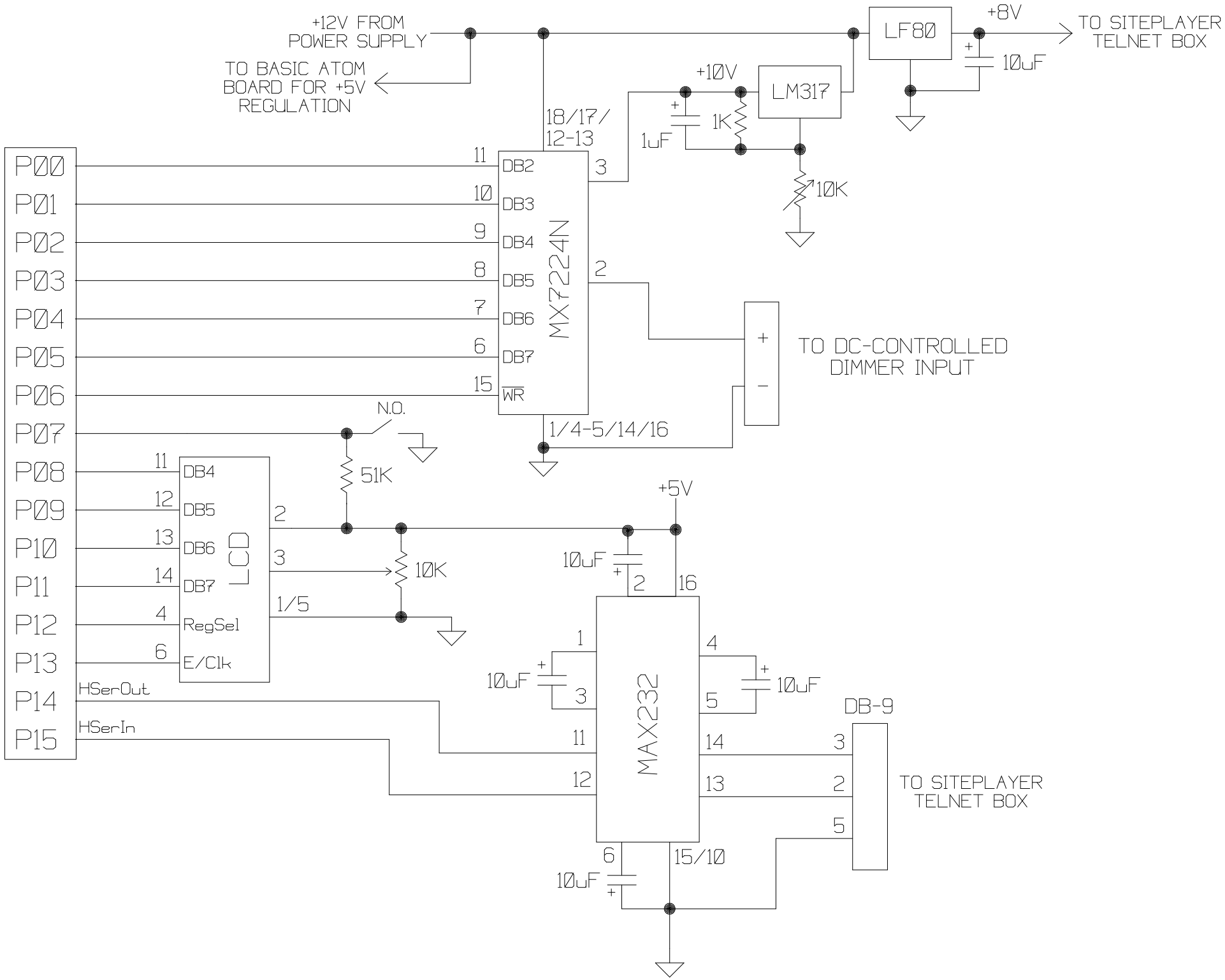
+12V FROM
POWER SUPPLY
TO BASIC ATOM
BOARD FOR +5V
REGULATION
LF80
+8V
TO SITEPLAYER
TELNET BOX
10uF
+10V
LM317
1K
1uF
10K
18/17/
12-13
MX7224N
DB2
DB3
DB4
DB5
DB6
DB7
WR
1/4-5/14/16
TO DC-CONTROLLED
DIMMER INPUT
P00
P01
P02
P03
P04
P05
P06
P07
P08
P09
P10
P11
P12
P13
P14
P15
HSerOut
HSerIn
N.O.
51K
LCD
DB4
DB5
DB6
DB7
RegSel
E/Clk
1/5
10K
+5V
10uF
MAX232
DB-9
TO SITEPLAYER
TELNET BOX
15/10